

ATOLUX

Prime

Track spotlight with precision optics and CRI e 97, designed for high light quality in museums and galleries.

CATEGORY
Track luminaires

MOUNTING
Track

IP CLASS
IP20 (boven) / IP20 (onder)

COLOUR TEMPERATURE
3000K, 4000K

CRI
CRI90, CRI97

Introduction

Track spotlight with precision optics and CRI e 97, designed for high light quality in museums and galleries.

With the Prime, you choose architectural lighting that unites design and light quality. Designed for kantoren, musea, public spaces, vrijetijdssector, retail, the luminaire integrates neatly into the design and delivers comfortable, considered light. Thanks to its thoughtful detailing and high-quality finish, it is a choice that lasts for years — and makes your project look better.

Technical specifications

Mounting	**Track**
Application	**Kantoren, Musea, Public spaces, Vrijetijdssector, Retail**
Dimensions	**55x130mm**
Material	**Aluminium (behuizing)**
Optics	**Lens**
IP class	**IP20 (boven) / IP20 (onder)**
CRI	**CRI90, CRI97**
CCT	**3000K, 4000K**
Control	**aan/uit, DALI-2, 1-10v, Casambi, On request**
Service life	**L90@100.000 uur**
Voltage / freq.	**220-240V, 50 / 60Hz**
Photobiological safety	**IEC 62471: RG1 (low risk)**
Insulation class	**Class II**
Power factor	**>0.9**
Ambient temperature	**-20°C / +40°C**
Colour	**RAL9016, RAL9005**
Brand	**Atolux**
Category	**Track luminaires**

Product photos

Atmosphere and product images — technical drawings are on a separate page



Technical drawings

Dimensions and line art — not to scale

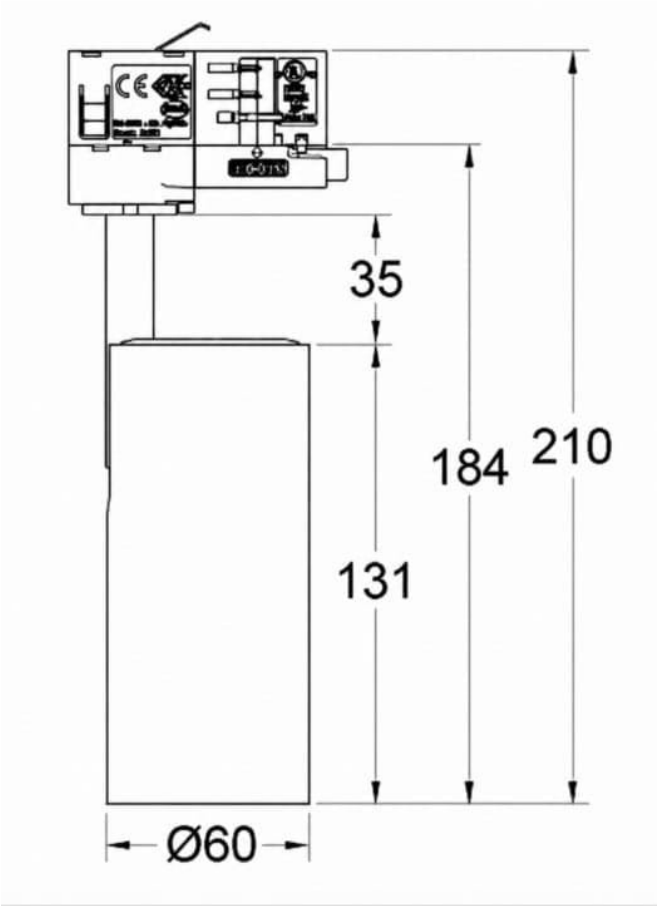

Technical drawing

Specification text

Atomis Prime LED track spotlight. Tiltable and rotatable LED track spotlight for 3- and 5-circuit track systems, designed specifically for high light quality in museums and galleries. Fitted with precision optics with fixed beams and a collimator lens in high-grade polymer with an optical efficiency of more than 88%. Colour rendering CRI e 97 with a colour consistency of SDCM=2. Integrated constant-current driver with active PFC and multi-protocol dimming (DALI, Casambi BLE, 1-10V) with a flicker-free dimming range down to 0.1% in accordance with IEEE 1789. Photobiological safety in accordance with IEC 62471 RG1 (low risk) and an expected service life of L90B50 at 60,000 operating hours (Tq 25°C).

Information

Atomis Architectural Lighting · atomislighting.com · The Netherlands

Generated on 23 November 2026